VIVREAU FILL 200

TAP SYSTEM WODT (WITHOUT DRIP TRAY)

TAP SYSTEM OCDT (OVER THE COUNTER DRIP TRAY)

INSTALLATION REQUIREMENTS

I. Installation requirements

- **Do not install near direct or indirect heat sources (e.g. ovens, dishwashers, etc.). Ensure that hoses and cables do not contact heat sources.**
- **Place on a level surface resistant to liquids and heat that can bear the weight.**
- **Do not install at locations where there is a possibility of sprayed water or jets of water.**
- **Do not place any objects on the water dispenser.**
- **Make sure the environment condition is not explosive, corrosive or abrasive. Keep away from flammable objects.**
- **Avoid agitations and vibrations.**
- **The water dispenser is not suited for outdoor use.**
- **The ambient temperature should not exceed 32 °C / 89.6 °F.**

1 Water connection:
A corresponding and functioning drinking water connection must be in the vicinity (to be provided by operator):
- ¾” male angle valve or ¾” male isolation valve terminated in a vertical position, preferably in stainless steel with shut-off valve in the cabinet underneath. The valve may also be made of chrome, plastic or brass in accordance with local legal requirements.
- For best performance and hygiene it should be located not more than 2 m left or right of the system. Do not exceed 6 m.
- Min. water supply flow pressure: 4 bar / 0.4 MPa (at 2 l/min waterflow).
- Connect only to drinking water lines that supply drinking water quality in accordance with the drinking water regulations at the location of use.
- Do not use in combination with a decarbonating filter or with pH-reducing systems (e.g. RO-system). Critical pH-value is < 6.5 pH.
- Install the provided water pressure regulator including a controllable backflow preventer. Thus, a backflow or back siphonage of water into the water supply network according to DIN EN 1717 is prevented and the water dispenser protected.

2 Electrical connection:
UK: 1 grounded switch socket 230 V / 10 A
Europe & Australia:
1 grounded switch socket 230 V / 13 A
in base cupboard unit at high level, max. 3 m left or right of the system. If needed, an extension cable has to be provided by the operator.

3 Waste water connection or waste water container (optional):
Waste connection, trapped up stand to facilitate a ½” flexible pipe (to be provided by operator).
Max. 2 m left or right of the system.

4 CO_2: Foodgrade CO_2 bottle type E290 is to be provided by the operator.
The spatial volume of the installation room must be known. The max. permissible size of the CO_2 bottle is calculated from this. Contact customer service if in doubt about the CO_2 bottle size. The CO_2 bottle must be placed as far as possible from any heat sources.

II. Ventilation options

The ventilation areas in the cabinet should be prepared by the operator prior to the installation. Please contact your customer service for more details.
The cabinet may be ventilated in three different ways to prevent excessive heat build-up. The methods shown all take advantage of natural circulation by placing two grilles or cut-outs; one near the base and the other at the top part of the door.
Base/ kitchen cabinet back panel must be removed for better ventilation. Insufficient ventilation will lead to performance decrease.

Ventilation requirements:
The water dispenser must be installed in such a manner that there is sufficient ventilation. Never cover or block ventilation slits and cooling fins.
The distance from worktop to upper obstacles (e.g. cupboards) should be min. 600 mm (see IV. Arrangement)

All dimensions in mm.

Front view

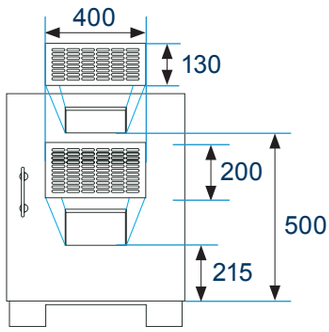

Front Ventilation - installation without air duct
2 Ventilation cut out are needed with the mentioned minimum size.

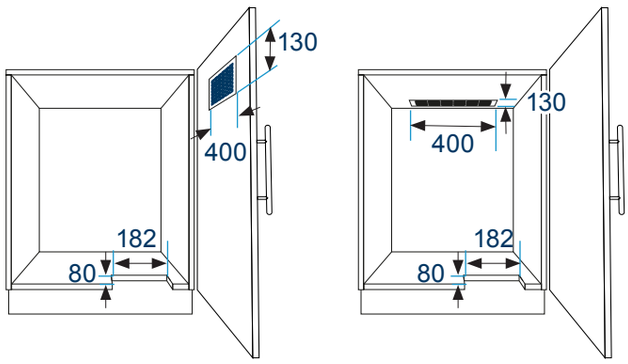

Base Cut-Out
In case the use of dedicated air duct is prefered, cut the base of the cabinet in the mentioned size. In this case a ventilation grid on the top is also necessary.

Dedicated air-duct is available optionally to order. Contact the customer service accordingly.

III. Preparation

Preparation of the furniture for installation.
All dimensions in mm.

For cutting the kitchen worktop, please use the cutting template included in the scope of delivery.
Please ensure a distance of minimum 200 mm between the dispensing tap and the back wall. The position of the dispense unit has to guarantee a sufficient view angle into the head unit.
The waste water siphon must be at least 110 mm below the icebank outlet of the undercounter unit. The under counter unit has to be as closest as possible to the siphon.

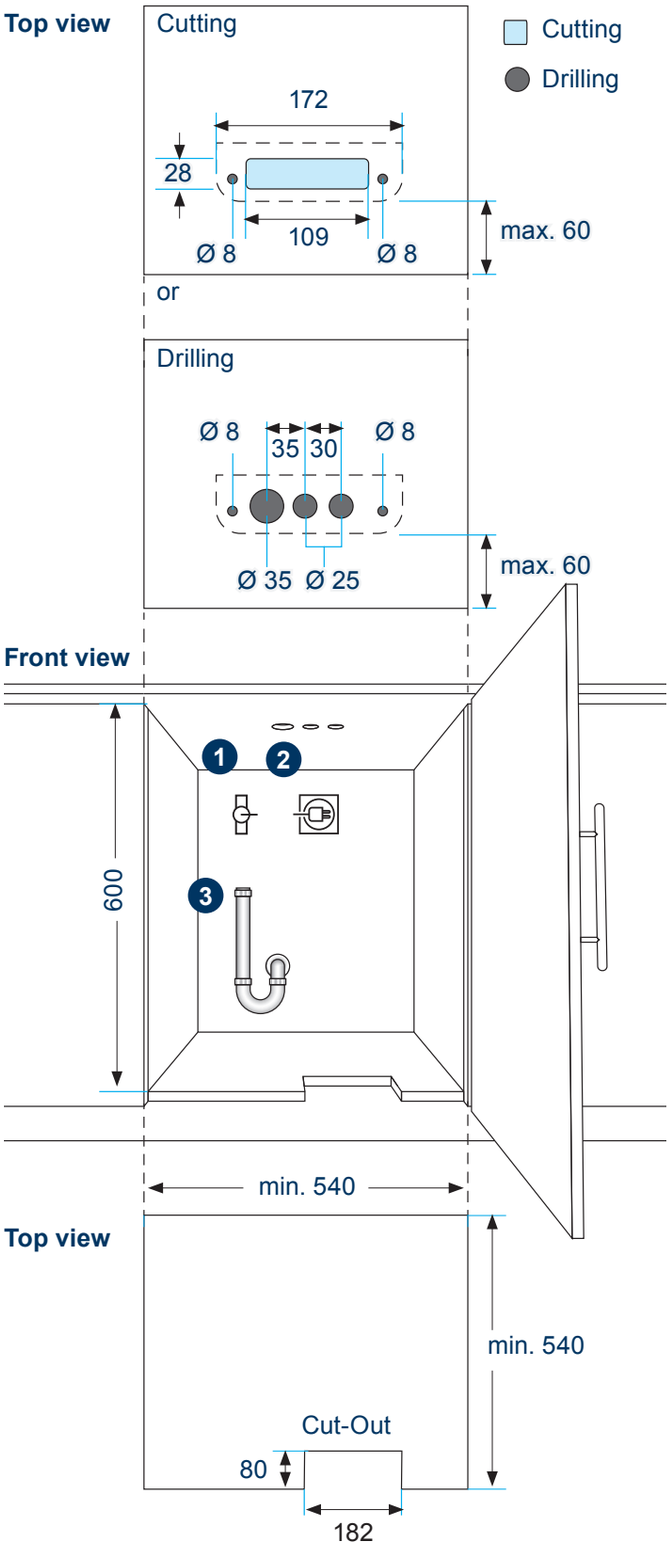

IV. Arrangement

All dimensions in mm.

a. Dispensing tap
b. Over the counter drip tray
c. Cooler-Carbonator
d. CO_2 bottle
e. CO_2 pressure regulator
f. Filter: CLARITY Taste 100
g. Optional: Waste water container

Place the Cooler-Carbonator (with or without dedicated air-duct) as far to the front as possible and leave a free space around it of preferably 100 mm on all side and minimum 50 mm from cabinet wall side.
For the installation in 600 mm kitchen cabinet please only use the max. 2 kg CO_2 bottle. If a bigger CO_2 bottle has to be used, this must be placed separately e.g. in the nearby cabinet.

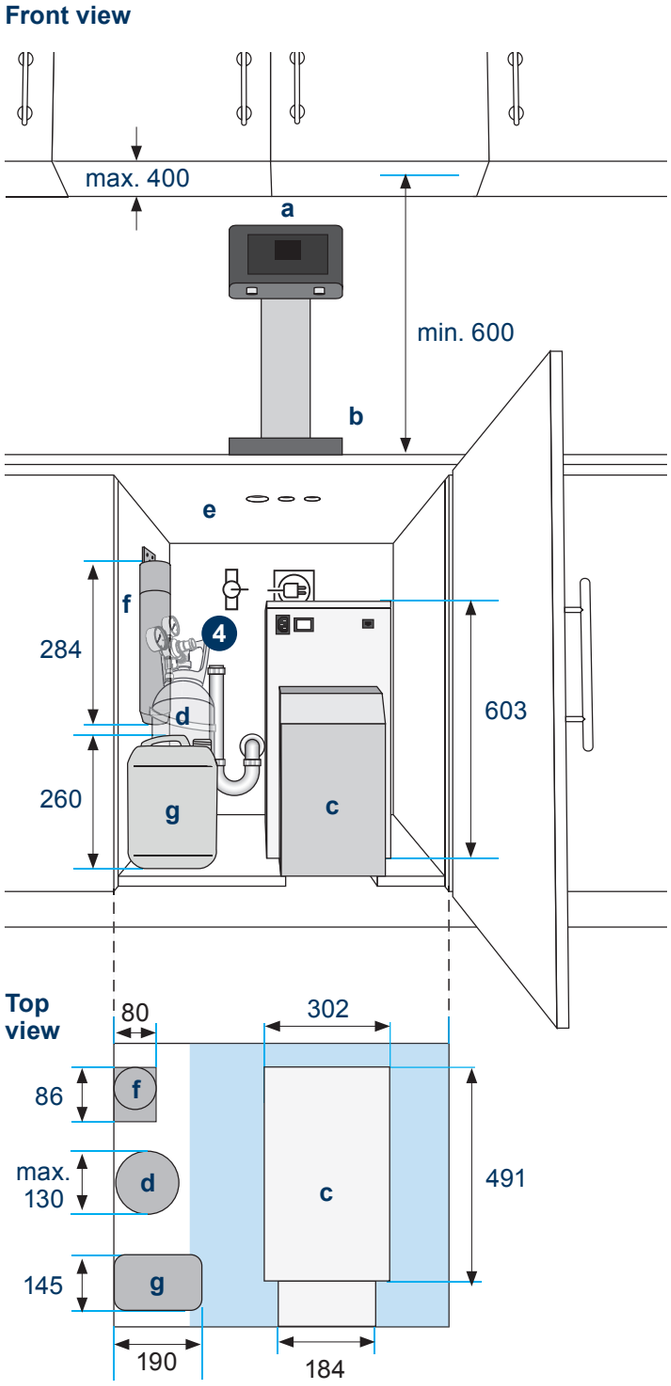

V. Dimensions

All dimensions in mm.

WODT

OCDT

Drip tray

Cooler-Carbonator

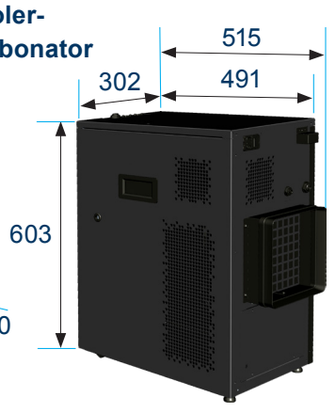

Dedicated Air-Duct

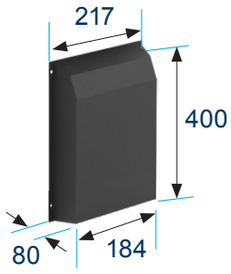

VI. Technical data

		VIVREAU Fill 200 WODT	VIVREAU Fill 200 OCDT
Cooling capacity (l/h)		120	120
Minimum distance to kitchen upper cabinet (mm)		200	200
Dimensions Dispense Unit (W x H x D mm)		290 x 544 x 128	290 x 544 x 128
Dimensions Undercounter Cooler Carbonator without air duct (W x H x D mm)		302 x 603 x 491	302 x 603 x 491
Dimensions Undercounter Cooler Carbonator with air duct (W x H x D mm)		302 x 603 x 530	302 x 603 x 530
Dispensing height (mm)		383	345
Weight Dispense Unit (kg)		5.,15	5.15
Weight Undercounter Cooler Carbonator (kg)		40	40
Max. flow rate (l/min)		2 l/min	2 l/min
Drip tray		Not included. Existing drip tray on the worktop is required.	Included. Removable with sensor, always to be used.
Water types		Unchilled, chillled still, semi sparkling, sparkling	Unchilled, chillled still, semi sparkling, sparkling
Hygiene configuration		ThermalGate™	ThermalGate™
Waste water connection		To be installed in location with existing drip tray.	Waste water pipe (optional) Waste water container (optional)
Voltage (V)		230	230
Frequency (Hz)		50	50
Max. current (A)		2.3	2.3
Max. power consumption (W)		529	529
Min. fuse (A)		10	10
Protection class		I	I
CO_2 operating pressure (MPa)		0.4	0.4
Max. inlet water pressure (MPa)		0.6	0.6
System operating inlet water pressure (MPa / psi)		0.25 - 0.4 / 36.3 - 58	0.25 - 0.4 / 36.3 - 58
Inlet water temperature (°C)		5 - 25	5 - 25
Location temperature range (°C)		16-32	16-32
Max. relative humidity (%)		60	60
Noise emission dispensing / cooling (dbA)		63 / 42	63 / 42
Refrigerant	Type	R290	R290
	Charge (g)	65	65
Max height above sea level (m)		<2000	<2000

BRITA GmbH
Heinrich-Hertz-Str. 4
65232 Taunusstein
Germany

www.brita.net

BRITA Vivreau Ltd
1st Floor
Beaufort House
Cricket Field Road
Uxbridge UB8 1QG
United Kingdom
www.vivreau.com