ST323PM

Product Family	Dishwashers
Colour	Silver
Finishing	Silver
Width	60 cm
Commercial height	82 cm
Installation	Fully-integrated built-in
Kitchen panel	Not supplied
N° baskets	3, FlexiDuo
Motor	Inverter 2.0
Type	Semi professional
EAN code	8017709307363

Programs / Functions

No. of programmes	10+1

Washing temperatures

45	50	65
70	75	

Soak	
Crystal	
Crystal Pro	
Full express - 60 minutes	
ECO	
Auto sensor 45-65	
Mix	
Intense	
Self clean	
Hygiene 99,9%	
Ultra Express	

Options

smeg
technology with style

Dry Assist+ option	Yes
Delay timer option	Up to 24 hours, with automatic soak
1/2 load FlexiZone option (varied distribution)	Yes
Professional option	Yes

Baskets

Basket colour	Grey
Basket components colour	Grey
Handle	In plastic with stainless steel insert on upper and lower basket
Upper Basket	With 3 foldable racks
Glass holder	Yes
Height adjustment of the upper basket	On three levels
Sliding Guides Extra Glide	Yes
Largest loadable dish in upper basket	19,0 cm
Lower Basket	With 4 foldable racks
Lower basket with anti-drip inserts	Yes
Largest loadable dish in lower basket	30,0 cm
Colour Inner Components	Blue

Technical Features

Width (mm)	598 mm
Depth (mm)	545 mm
Display type	3 digit
Product Height (mm)	818 mm
Controls	Electronic
Display	Delayed start, Programme time indicator, Time to end indication
Programme graphics	Symbols
On/off indicator	Yes
Salt light indicator	Light
Rinse aid indicator	Light
End of cycle indicator	ActiveLight
Washing system	Planetarium
Third spray arm	Single
Water softener	With electronic setting
Turbidity sensor Aquatest	Yes
Flood protection system	Total Acquastop
Water supply	Single; cold/hot water max. 60°C - energysave with hot water up to 35%
Max water hardness	100°fH;58°dH
Drying system	Natural condenser drying, with Dry Assist + automatic door opening system at the end of the cycle
Steam protection	In plastic
Tank material	Stainless steel
Filter	Stainless steel
Concealed heating element	Yes
Hinges	Self balancing, Sliding, FLEXIFIT
Min. and max. frontal panel weight	2 - 11 kg
Min. and max plinth height	50 - 215 mm
Adjustable feet	7cm, from 820 to 890 mm
Additional gaskets	Yes, with stainless steel plate
Back cover	Yes
Depth of dishwasher with open door (mm)	1146
Back feet adjustable from front	Yes

Top cover	In plastic

Performance / Energy Label NEW

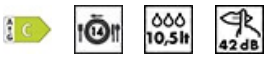

Energy Efficiency Class (Washing cycle)	C	**Programme duration**	4:25 h:min
Energy consumption [per 100 cycles, based on the eco programme]	75 KWh	**Airborne acoustical noise emissions (spinning phase)**	42 dB(A) re 1 pW
Rated capacity (ps)	14	**Airborne acoustical noise emission class**	B
Water consumption [per cycle]	10.5 litres	**Energy efficiency Index (EEI) (Washing cycle)**	43.8

Electrical Connection

Connected power	5450 W	**Frequency (Hz)**	50 Hz
Current	32 A	**Type of connection**	Single-phase
Voltage	220-240 V	**Power supply cable length**	200 cm

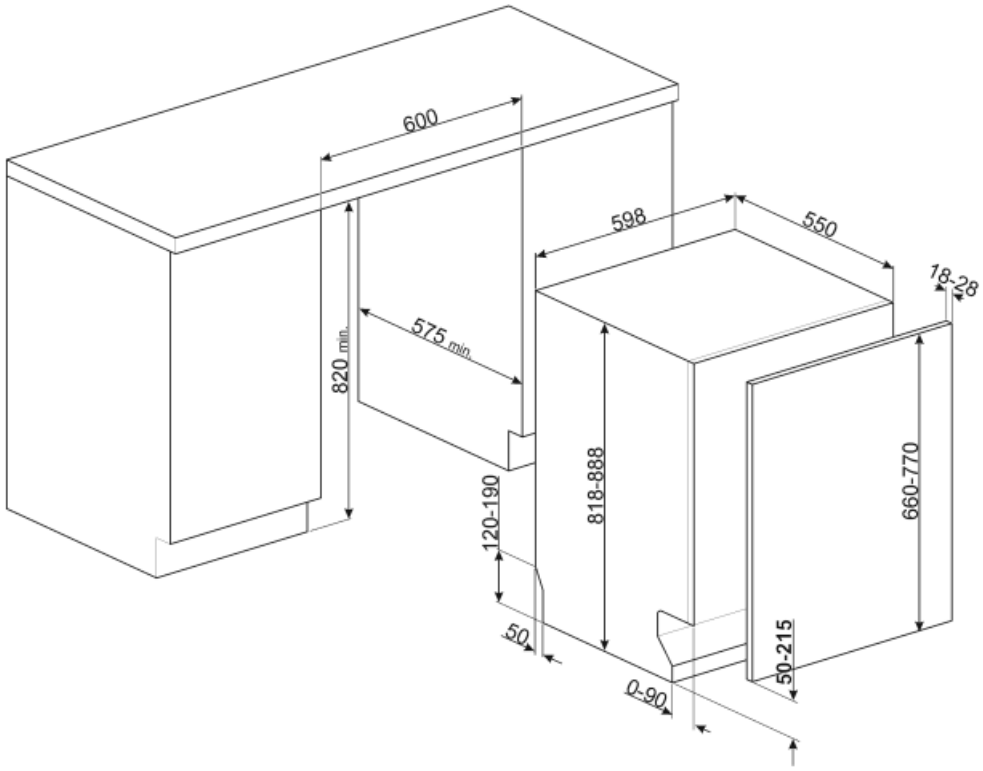

Not included accessories

KITPL60B

Toekick Kit in White colour with adjustable height and deepness. Can be installed over all the fully integrated and underbench models with variable fulcrum or flexifit hinges.

KITPL60X

Toekick Kit in Stainless Steel with adjustable height and deepness. Can be fitted over all the fully integrated and underbench models with variable fulcrum or flexifit hinges.

KITPLV2

Kit extension for dishwasher and washing machine: length mt. 2

KIT82CX

KITPL60N

Toekick Kit in Black colour with adjustable height and deepness. Can be installed over all the fully integrated and underbench models with variable fulcrum or flexifit hinges.

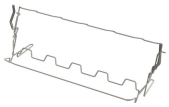

KITGH

Kit glass holder. It has to be fitted on the first basket but only if there are foldable racks

KITFLEXI

Symbols glossary

Activelight is an led light which projects a red spot onto the floor beneath the dishwasher when the appliance is in use.

Anti-drip: Some models of dishwashers are equipped with special polymer nozzles anti-drip, that improve the process of drying.

Delay Timer: The delay timer can postpone the start of the program by up to 24 hours.

Models with new Flexi Fit hinges are able to be installed in kitchens with a plinth of just 5cms. With this new hinge design, the panel has a sliding movement from the bottom to the top, avoiding any possible interference of the panel with the plinth.

The new ExtraGlide guide system, available on top of the range models, makes the second basket even smoother and softer. In fact, it facilitates the extraction of the introduction, even at full load and, for the greater excursion, the insertion of crockery is also facilitated in the rear part.

PLANETARIUM_WASHING_SYSTEM_72dpi

Crystals: The Crystals programme is dedicated to delicate dishes such as glasses and china.

Normal programme: The normal programme is suitable for normal degrees of dirt for everyday use.

Ultraclean: The Ultraclean option performs a final rinse at a high temperature of 70°c eliminating virtually all bacteria.

Quick Time: The Quick Time option can reduce the length of the wash cycle up to 55%.

Aquatest measures the clarity of the water during an auto program, and automatically ensures the minimum consumption of water and energy.

COMM_HEIGHT_82_72dpi

FlexiDuo: The FlexiDuo 3rd cutlery basket allows you to arrange cutlery or small cups, ladles, or bulky utensils however you like: it consists of two separate and moveable modules.

FlexiZone: The ½ load flexizone allows you to wash a reduced load saving energy, water and time and there are no restrictions on where the items are placed.

Noise Level: Excellent insulation and special devices keep noise to a minimum.

Auto 45°- 65°: The auto programme regulates the length of a cycle depending on the need for a pre-wash and the number of rinses required.

Eco: Eco, this economic wash programme uses a low amount of water and energy in order to provide the most environmentally friendly cleaning option.

Soak programme: The soak programme provides a rinse to prevent dirt from drying.

Professional: Option Professional enables to convert househlold appliances into semiprofessional ones due to the programs which significantly reduce washing time to obtain an astonishing 16 minutes cycle.

The symbols show the number of plate settings of the dishwasher.

Total Acquastop: In addition to the partial Acquastop protection present in all Smeg dishwashers, some models have an electronic device fitted to the water intake hose, which monitors water levels in the machine, detects leaks in the hose and switches off the water supply immediately when necessary.

System WaterSave ensures the best washing results with minimal water consumption depending on the model of dishwasher.

...

...

Special quick program for washing glasses.

The Dry Assist + option, in addition to saving energy, ensures perfect drying of the dishes by opening the door automatically at the end of the wash c

Energy efficiency class C

HYGIENE 99.9% High-temperature washing programme. The 75° rinse guarantees the removal of 99.9% of germs and bacteria, making it ideal for sanitising

The work aimed at continuous improvement has allowed the creation of the second generation of the Inverter motor 2.0, characterised by greater efficiency and durability over time, which allows very high performance and a lower energy consumption and noise level.