PRINCECASTLE

Product Holding Bin
EHB23

Specification Sheet

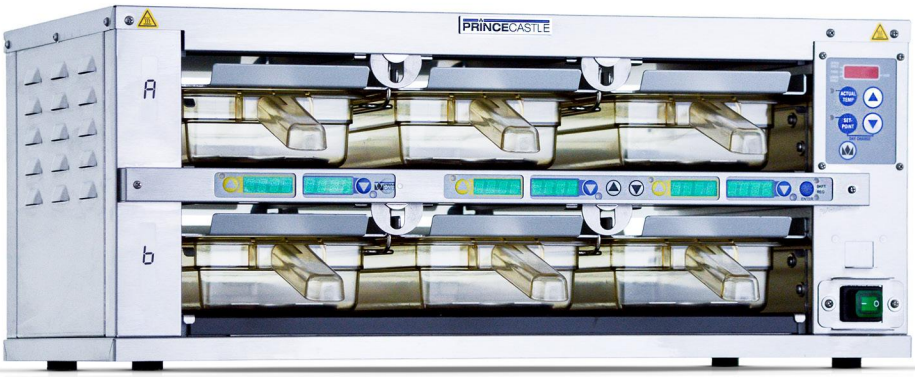

Features

IoT Connectivity
Connection and integration with POS and KMS networks

All-Day Menu Variety
Up to six different daypart menu options

Dual Zone Temperature Control
Zoned top and bottom heaters control temperatures for every two pans to better manage food quality

Digital Display
Digital display front and back timer bars available

Durable Construction
Durable stainless steel construction for longer lasting equipment life

Cook More Alert
Never run out of food with alerts that notify when to cook more product

Single-Sided and Pass-Through Design
Configurations available in single-sided and pass-through design for maximum application flexibility

Simple Menu Selection and Upload
USB port included for easy upload of new menus

Rackless Design
Fewer parts to clean and maintain simplifying the overall cleaning process

Warranty
1-year parts and labor warranty including on-site service

MARMON Foodservice Technologies
A BERKSHIRE HATHAWAY COMPANY

Product Holding Bin
EHB23

Specification Sheet

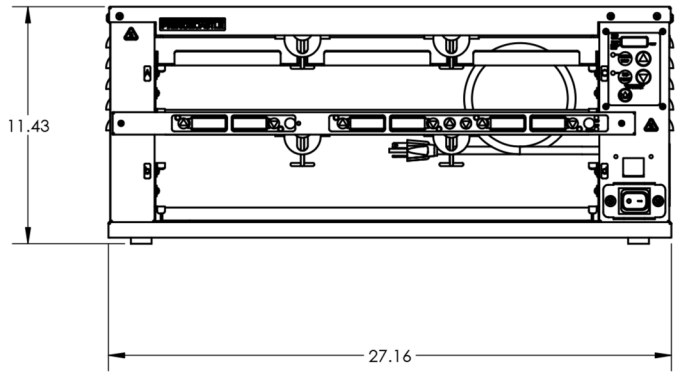

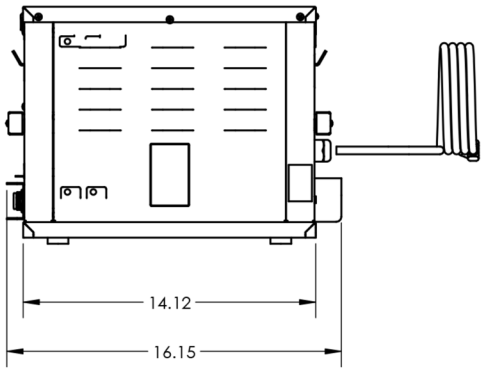

Model Number	Description
EHB23	EHB23, 1/3 Pan, Single Sided Timer Bar, North America
EHB23A	EHB23, 1/3 Pan, Double Sided Timer Bar, North America
EHB23CE	EHB23, 1/3 Pan, Single Sided Timer Bar, International
EHB23ACE	EHB23, 1/3 Pan, Double Sided Timer Bar, International
	Lid Count: EHB23 models come with 0 lids

Accessories Number	Description
TBD	1/3 Size x 2.5" Single Handle Pan
TBD	1/3 Size x 2.5" Dual Handle Pan
115-00242-16	Stainless Steel Trivet (Pack of 16)
540-1327S	PHU 2.5" Leg Kit
Burger King Corporation is requesting each store location have at least 32 PHU slots and Stainless Steel trivets for fried products - Stainless Steel trivets and plastic pans are sold separately.	

Technical Specifications

MODEL NUMBER	Width (cm)	Depth (cm)	Height (cm)	Weight (kg)	Shipping (kg)
EHB23	27.2" (69.1cm)	14.1" (35.8cm)	11.1" (28.2cm)	45 lbs (19.9 kg)	74 lbs (33.6 kg)
EHB23A	27.2" (69.1cm)	14.1" (35.8cm)	11.1" (28.2cm)	45 lbs (19.9 kg)	74 lbs (33.6 kg)
EHB23CE	27.2" (69.1cm)	14.1" (35.8cm)	11.1" (28.2cm)	45 lbs (19.9 kg)	74 lbs (33.6 kg)
EHB23ACE	27.2" (69.1cm)	14.1" (35.8cm)	11.1" (28.2cm)	45 lbs (19.9 kg)	74 lbs (33.6 kg)

MODEL NUMBER	Volts	Watts	Amps	Hertz	Plug
EHB23	208-240VAC	1339-1970	6.8-7.8	50/60	6-15P
EHB23A	208-240VAC	1339-1970	6.8-7.8	50/60	6-15P
EHB23CE	208-240VAC	1339-1970	6.8-7.8	50/60	IEC309
EHB23ACE	208-240VAC	1339-1970	6.8-7.8	50/60	IEC309

To learn more about **EHB Holding Bins** visit princecastle.com
To contact a Prince Castle expert today, visit princecastle.com/contact-us

MARMON Foodservice Technologies
A BERKSHIRE HATHAWAY COMPANY

© 2020 Prince Castle LLC 111020