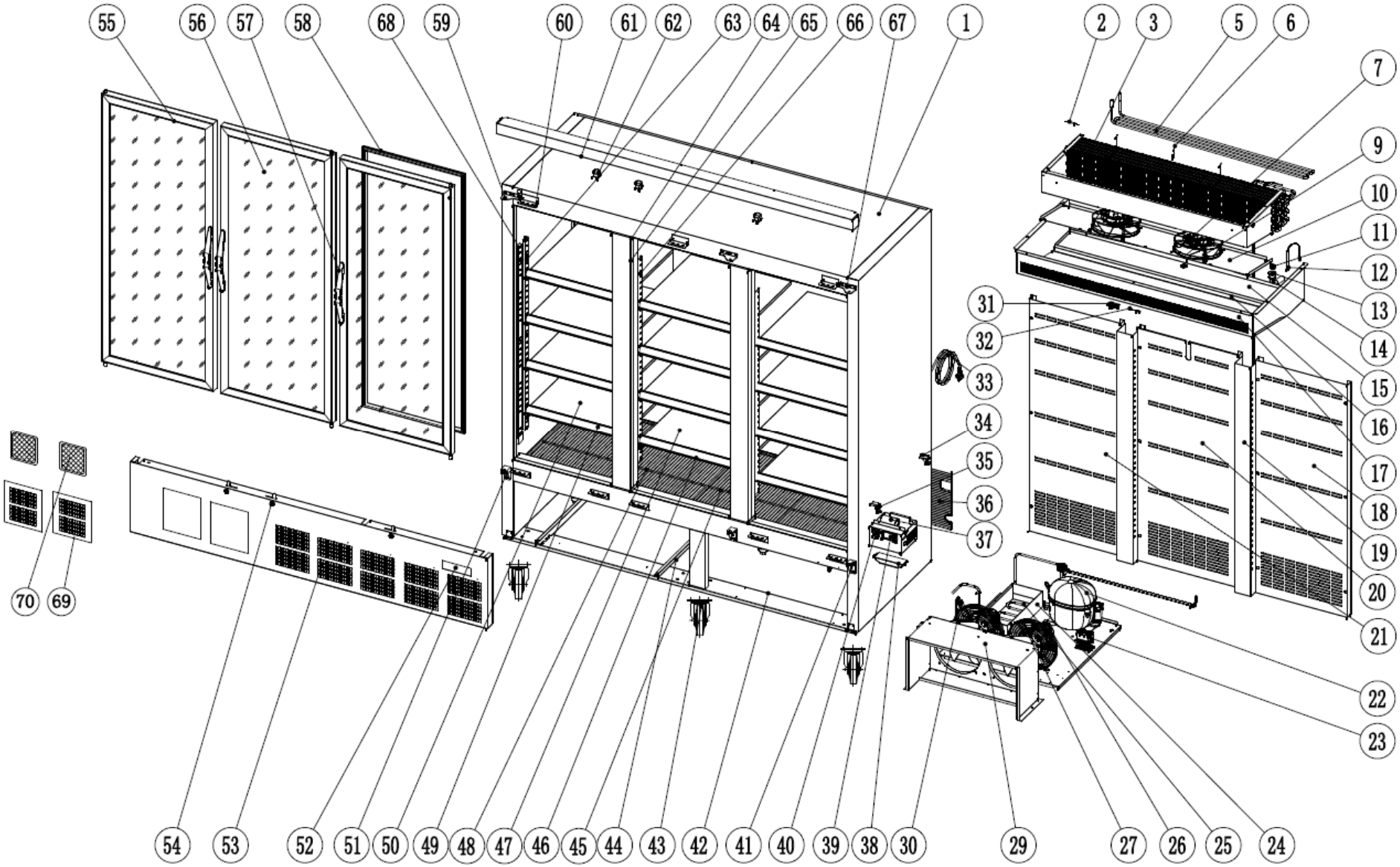

☎ Technical & Spares helpline 0845 111 0538
spares@uropa-service.co.uk

Machine	Explode	Code	Description
Polar G-series Multideck Freezer with Triple Doors	1	☎	Body
Polar G-series Multideck Freezer with Triple Doors	2	AU862	Protector for Defrost Heating Element
Polar G-series Multideck Freezer with Triple Doors	3	AU847	Evaporator
Polar G-series Multideck Freezer with Triple Doors	5	AS489	Heater
Polar G-series Multideck Freezer with Triple Doors	6	AC614	Defrost Sensor
Polar G-series Multideck Freezer with Triple Doors	7	AK188	Circle Fan
Polar G-series Multideck Freezer with Triple Doors	7		Fan Blade
Polar G-series Multideck Freezer with Triple Doors	9	AU861	Basket Guard Grill
Polar G-series Multideck Freezer with Triple Doors	10	☎	Fan Support
Polar G-series Multideck Freezer with Triple Doors	11	AL159	Outside Water Pipe Bolt
Polar G-series Multideck Freezer with Triple Doors	12	AU863	Water Pipe Heater
Polar G-series Multideck Freezer with Triple Doors	13	AK539	Internal Water Pipe Nut
Polar G-series Multideck Freezer with Triple Doors	14	AU848	PP Pipe
Polar G-series Multideck Freezer with Triple Doors	15	AU864	Evaporator Water Pan
Polar G-series Multideck Freezer with Triple Doors	16	AU850	Water Box Foam
Polar G-series Multideck Freezer with Triple Doors	17	☎	Evaporator Cover
Polar G-series Multideck Freezer with Triple Doors	18	☎	Conduct Board Right
Polar G-series Multideck Freezer with Triple Doors	19	☎	Back Support
Polar G-series Multideck Freezer with Triple Doors	20	☎	Conduct Board Middle
Polar G-series Multideck Freezer with Triple Doors	21	☎	Conduct Board Left
Polar G-series Multideck Freezer with Triple Doors	22	AJ141	Compressor (R290)
Polar G-series Multideck Freezer with Triple Doors	23	AK621	Relay
Polar G-series Multideck Freezer with Triple Doors	24	AF875	Water Box
Polar G-series Multideck Freezer with Triple Doors	25	AS475	Discharge Pipe
Polar G-series Multideck Freezer with Triple Doors	26	AN973	Condenser Fan
Polar G-series Multideck Freezer with Triple Doors	26		Fan Blade
Polar G-series Multideck Freezer with Triple Doors	27	AU623	Basket Guard Grill
Polar G-series Multideck Freezer with Triple Doors	29	AS490	Condenser
Polar G-series Multideck Freezer with Triple Doors	30	AF800	Filter Drier
Polar G-series Multideck Freezer with Triple Doors	31	AC614	Room Sensor
Polar G-series Multideck Freezer with Triple Doors	32	AK128	Sensor Fixed Box
Polar G-series Multideck Freezer with Triple Doors	33	AG554	UK Power Cord
Polar G-series Multideck Freezer with Triple Doors	34	AT790	Support B
Polar G-series Multideck Freezer with Triple Doors	35	AT791	Support A
Polar G-series Multideck Freezer with Triple Doors	36	☎	Back Protect Grill
Polar G-series Multideck Freezer with Triple Doors	37	AF807	Capacitor
Polar G-series Multideck Freezer with Triple Doors	38	AS488	LED Transformer
Polar G-series Multideck Freezer with Triple Doors	39	AD728	Thermostat
Polar G-series Multideck Freezer with Triple Doors	40	AB308	Main Switch
Polar G-series Multideck Freezer with Triple Doors	41	AS476	Down Hinge Right
Polar G-series Multideck Freezer with Triple Doors	42	☎	Support Board
Polar G-series Multideck Freezer with Triple Doors	43	AL547	Standard Castor

☎ Technical & Spares helpline 0845 111 0538
spares@uropa-service.co.uk

Machine	Explode	Code	Description
Polar G-series Multideck Freezer with Triple Doors	43		Braked Castor
Polar G-series Multideck Freezer with Triple Doors	44	☎	Guide
Polar G-series Multideck Freezer with Triple Doors	45	AS481	Bottom Shelf Right
Polar G-series Multideck Freezer with Triple Doors	46	AU473	Price Clip Middle
Polar G-series Multideck Freezer with Triple Doors	47	AS483	Shelf Middle
Polar G-series Multideck Freezer with Triple Doors	48	AS479	Bottom Shelf Left
Polar G-series Multideck Freezer with Triple Doors	49	AU474	Price Clip Left/Right
Polar G-series Multideck Freezer with Triple Doors	50	AS482	Shelf Left/Right
Polar G-series Multideck Freezer with Triple Doors	51	AS477	Down Hinge Left
Polar G-series Multideck Freezer with Triple Doors	52	AN024	Junction Box
Polar G-series Multideck Freezer with Triple Doors	52	AP081	Junction Box Cover
Polar G-series Multideck Freezer with Triple Doors	53	AU853	Front Panel
Polar G-series Multideck Freezer with Triple Doors	54	AD028	Lock & Key
Polar G-series Multideck Freezer with Triple Doors	55	AU856	Glass Door Left
Polar G-series Multideck Freezer with Triple Doors	56	AU855	Glass Door Right
Polar G-series Multideck Freezer with Triple Doors	57	AN927	Handle
Polar G-series Multideck Freezer with Triple Doors	58	AS484	Door Seal
Polar G-series Multideck Freezer with Triple Doors	59	AU580	Up Hinge Left
Polar G-series Multideck Freezer with Triple Doors	60	☎	Panel Fixed Board
Polar G-series Multideck Freezer with Triple Doors	61	☎	Up Panel
Polar G-series Multideck Freezer with Triple Doors	62	AB888	Door Switch
Polar G-series Multideck Freezer with Triple Doors	63	AU461	Side Support Left/Right
Polar G-series Multideck Freezer with Triple Doors	64	AU857	Middle Girder Fixer
Polar G-series Multideck Freezer with Triple Doors	65	AU859	Middle Pillar
Polar G-series Multideck Freezer with Triple Doors	66	☎	Middle Support
Polar G-series Multideck Freezer with Triple Doors	67	AU581	Up Hinge Right
Polar G-series Multideck Freezer with Triple Doors	68	AS485	LED Lamp Right
Polar G-series Multideck Freezer with Triple Doors	68	AS486	LED Lamp Middle
Polar G-series Multideck Freezer with Triple Doors	68	AS487	LED Lamp Left
Polar G-series Multideck Freezer with Triple Doors	69	☎	Wind Window
Polar G-series Multideck Freezer with Triple Doors	70	AJ896	Screen Filter
Polar G-series Multideck Freezer with Triple Doors	71	AU860	Small Shelf
Polar G-series Multideck Freezer with Triple Doors	N/A	AN278	Electrics for Compressor NT2210U
Polar G-series Multideck Freezer with Triple Doors	N/A	AS497	Remote Control

☎ Technical & Spares helpline 0845 111 0538
spares@uropa-service.co.uk

Circuit Diagram

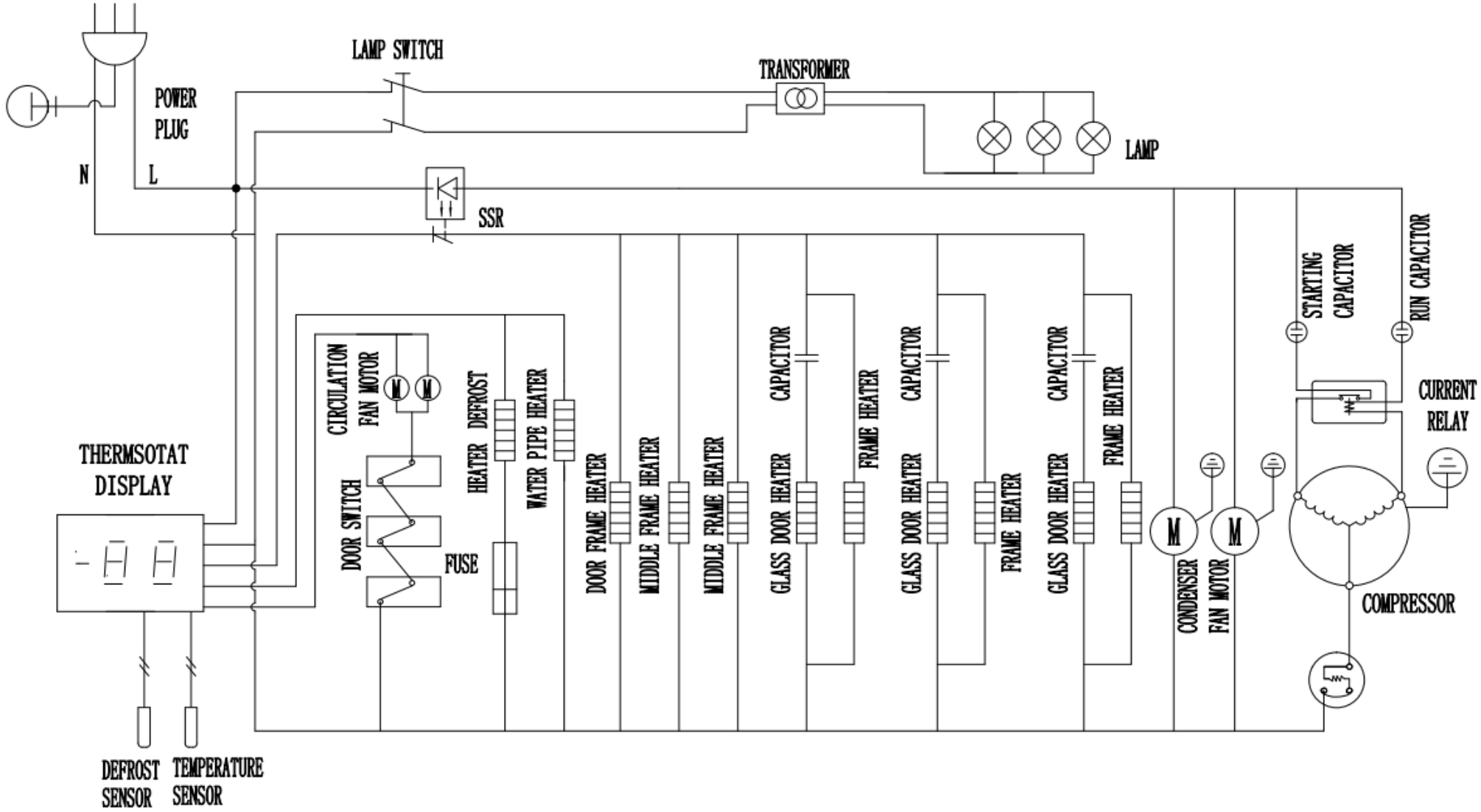

☎ Technical & Spares helpline 0845 111 0538
spares@uropa-service.co.uk