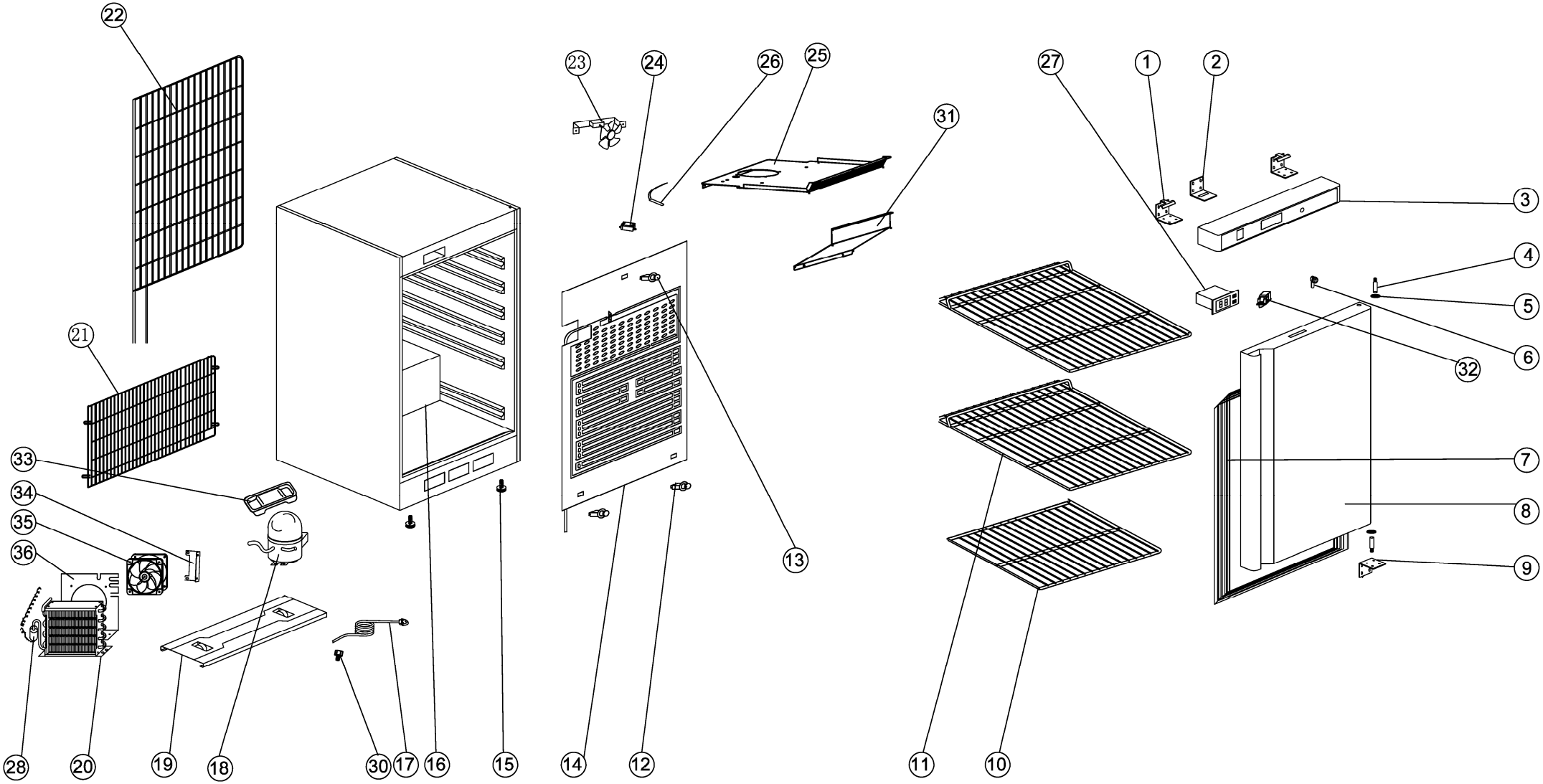

☎ Technical & Spares helpline 0845 111 0538
spares@uropa-service.co.uk

Machine	Explode	Code	Description
Polar C-Series Under Counter Fridge White 150Ltr	1	AD037	Up Hinge
Polar C-Series Under Counter Fridge White 150Ltr	2	AS896	Hook of Lock
Polar C-Series Under Counter Fridge White 150Ltr	3	AG190	Front Panel
Polar C-Series Under Counter Fridge White 150Ltr	4	AD026	Hinge Axis
Polar C-Series Under Counter Fridge White 150Ltr	5	AE827	Bushing
Polar C-Series Under Counter Fridge White 150Ltr	6	AD028	Lock & Key
Polar C-Series Under Counter Fridge White 150Ltr	7	AD023	Door Seal
Polar C-Series Under Counter Fridge White 150Ltr	8	AD008	Door
Polar C-Series Under Counter Fridge White 150Ltr	9	AD013	Down Hinge
Polar C-Series Under Counter Fridge White 150Ltr	10	AD001	Bottom Shelf
Polar C-Series Under Counter Fridge White 150Ltr	11	AD029	Shelf
Polar C-Series Under Counter Fridge White 150Ltr	12	AD014	Evaporator Fixer
Polar C-Series Under Counter Fridge White 150Ltr	13	AP439	Evaporator Fixer
Polar C-Series Under Counter Fridge White 150Ltr	14	AS899	Evaporator
Polar C-Series Under Counter Fridge White 150Ltr	15	AF885	Feet - AB361
Polar C-Series Under Counter Fridge White 150Ltr	N/A		Wheel
Polar C-Series Under Counter Fridge White 150Ltr	16	☎	Body
Polar C-Series Under Counter Fridge White 150Ltr	17	AG554	UK Power Cord
Polar C-Series Under Counter Fridge White 150Ltr	18	AS902	Compressor (R600a)
Polar C-Series Under Counter Fridge White 150Ltr	19	AD034	Unite Board
Polar C-Series Under Counter Fridge White 150Ltr	20	AS904	Condenser
Polar C-Series Under Counter Fridge White 150Ltr	21	☎	Unite Room Grills
Polar C-Series Under Counter Fridge White 150Ltr	22	AS905	Rear Condenser
Polar C-Series Under Counter Fridge White 150Ltr	23	AM405	Circuit Fan
Polar C-Series Under Counter Fridge White 150Ltr	24	AK128	Sensor Fixed Box
Polar C-Series Under Counter Fridge White 150Ltr	25	☎	Circuit Fan Support
Polar C-Series Under Counter Fridge White 150Ltr	26	AC614	Sensor
Polar C-Series Under Counter Fridge White 150Ltr	27	AB363	Thermostat
Polar C-Series Under Counter Fridge White 150Ltr	28	AG960	Filter Drier
Polar C-Series Under Counter Fridge White 150Ltr	30	AM936	Water Adapter Tube
Polar C-Series Under Counter Fridge White 150Ltr	31	☎	Circle Fan Cover
Polar C-Series Under Counter Fridge White 150Ltr	32	AB888	Door Switch
Polar C-Series Under Counter Fridge White 150Ltr	33	AJ964	Water Box
Polar C-Series Under Counter Fridge White 150Ltr	34	☎	Condenser Fan Support
Polar C-Series Under Counter Fridge White 150Ltr	35	AG971	Condenser Fan
Polar C-Series Under Counter Fridge White 150Ltr	36	☎	Condenser Air Deflector

☎ Technical & Spares helpline 0845 111 0538
spares@uropa-service.co.uk

Circuit Diagram

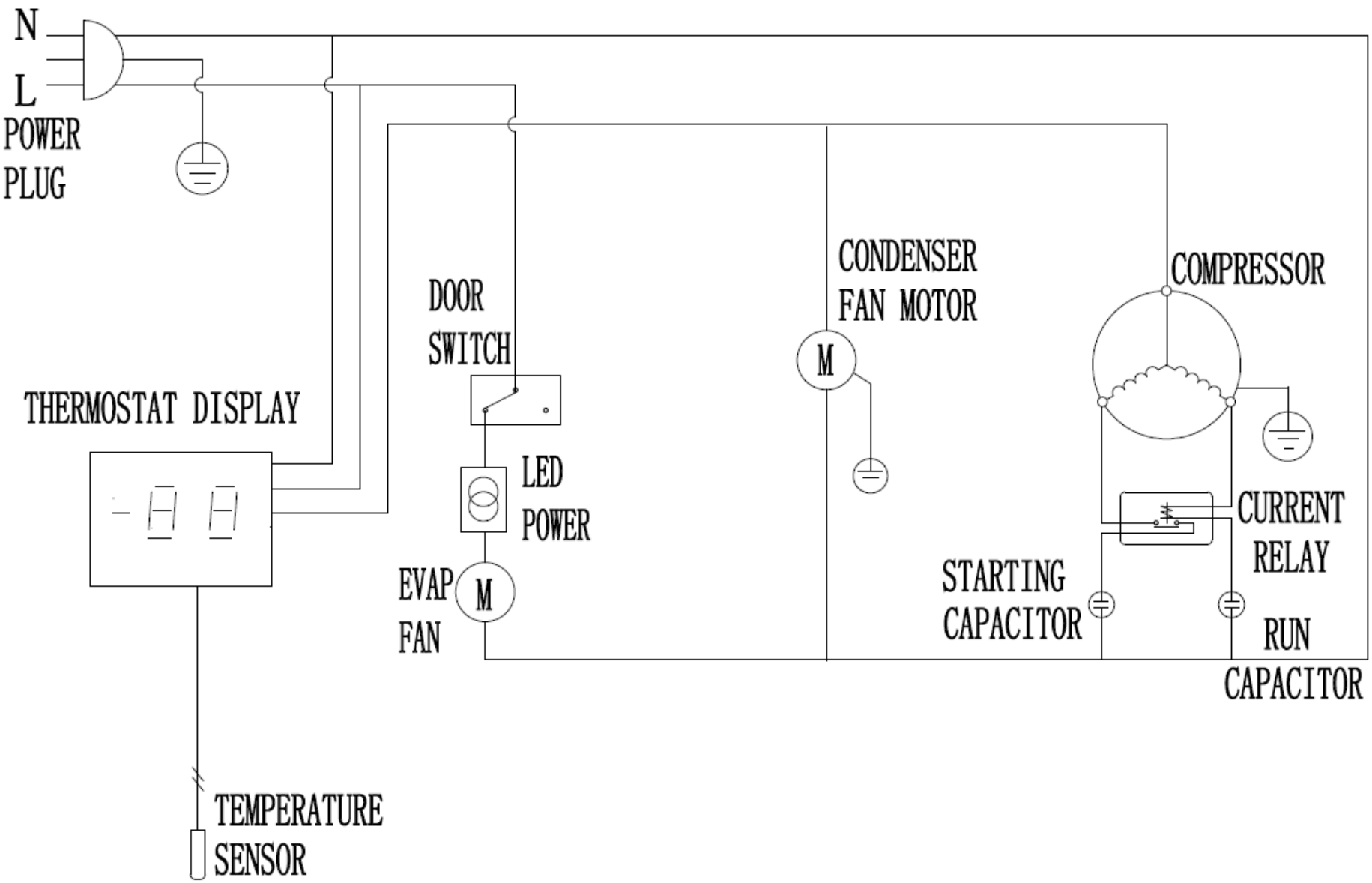

☎ Technical & Spares helpline 0845 111 0538
spares@uropa-service.co.uk