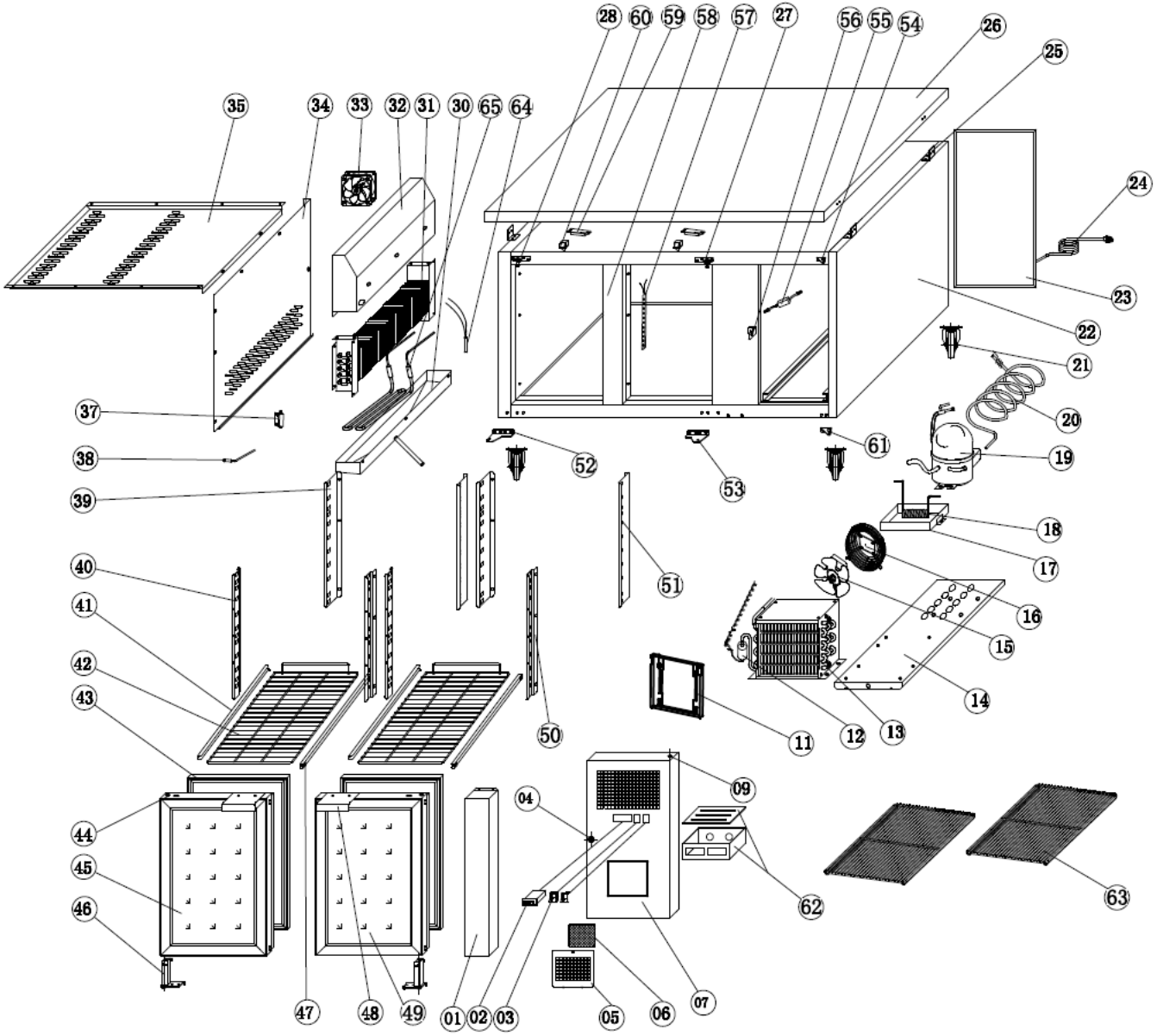

☎ Technical & Spares helpline 0845 111 0538
spares@uropa-service.co.uk

Machine	Explode	Code	Description
Polar U-Series 2 Door Counter with Glass Doors	1	AB294	Fixed Front Panel
Polar U-Series 2 Door Counter with Glass Doors	2	AD728	Thermostat
Polar U-Series 2 Door Counter with Glass Doors	3	AB308	Main Switch
Polar U-Series 2 Door Counter with Glass Doors	4	AB352	Lock & Key
Polar U-Series 2 Door Counter with Glass Doors	5	AG248	Air Flow Window incl. Screw
Polar U-Series 2 Door Counter with Glass Doors	6	AB914	Screen Filter
Polar U-Series 2 Door Counter with Glass Doors	7	AU574	Front Panel
Polar U-Series 2 Door Counter with Glass Doors	9	AE827	Bushing
Polar U-Series 2 Door Counter with Glass Doors	11	☎	Condenser Fan Support
Polar U-Series 2 Door Counter with Glass Doors	12	AB120	Filter Drier
Polar U-Series 2 Door Counter with Glass Doors	13	AS703	Condenser
Polar U-Series 2 Door Counter with Glass Doors	14	☎	Unit Board
Polar U-Series 2 Door Counter with Glass Doors	15	AJ520	Condenser Fan
Polar U-Series 2 Door Counter with Glass Doors	15		Condenser Fan Blade
Polar U-Series 2 Door Counter with Glass Doors	16	AM667	Basket Guard Grill
Polar U-Series 2 Door Counter with Glass Doors	17	AB293	Water Box
Polar U-Series 2 Door Counter with Glass Doors	18	AW370	Evaporate Pipe
Polar U-Series 2 Door Counter with Glass Doors	19	AK900	Compressor (R600a)
Polar U-Series 2 Door Counter with Glass Doors	20	☎	Suction Pipe incl. Capillary
Polar U-Series 2 Door Counter with Glass Doors	21	AE824	Standard Castor
Polar U-Series 2 Door Counter with Glass Doors	21		Braked Castor
Polar U-Series 2 Door Counter with Glass Doors	22	☎	Body
Polar U-Series 2 Door Counter with Glass Doors	23	☎	Unit Room Cover
Polar U-Series 2 Door Counter with Glass Doors	24	AG554	UK Power Cord
Polar U-Series 2 Door Counter with Glass Doors	25	AE800	Top Fixed Board
Polar U-Series 2 Door Counter with Glass Doors	26	☎	Top
Polar U-Series 2 Door Counter with Glass Doors	27	AM417	Upper Hinge Right
Polar U-Series 2 Door Counter with Glass Doors	28	AN921	Upper Hinge Left
Polar U-Series 2 Door Counter with Glass Doors	30	AA900	Evaporator Water Pan
Polar U-Series 2 Door Counter with Glass Doors	31	AH328	Evaporator
Polar U-Series 2 Door Counter with Glass Doors	32	AT730	Fan Support
Polar U-Series 2 Door Counter with Glass Doors	33	AS704	Circuit Fan
Polar U-Series 2 Door Counter with Glass Doors	34	AM723	Evaporator Cover
Polar U-Series 2 Door Counter with Glass Doors	35	☎	Air Flow Conduct Board
Polar U-Series 2 Door Counter with Glass Doors	37	AK128	Sensor Fixed Box
Polar U-Series 2 Door Counter with Glass Doors	38	AC614	Sensor
Polar U-Series 2 Door Counter with Glass Doors	39	AL626	Back Support Left
Polar U-Series 2 Door Counter with Glass Doors	40	AL627	Front Support Left
Polar U-Series 2 Door Counter with Glass Doors	41	AS705	Guide Left
Polar U-Series 2 Door Counter with Glass Doors	47		Guide Right
Polar U-Series 2 Door Counter with Glass Doors	42	AK727	Shelf
Polar U-Series 2 Door Counter with Glass Doors	43	AM420	Door Seal
Polar U-Series 2 Door Counter with Glass Doors	44	AH316	Down Hinge Axis Jacket

☎ Technical & Spares helpline 0845 111 0538
spares@uropa-service.co.uk

Machine	Explode	Code	Description
Polar U-Series 2 Door Counter with Glass Doors	45	AU575	Glass Door Left
Polar U-Series 2 Door Counter with Glass Doors	46	AL148	Door Spring Hinge
Polar U-Series 2 Door Counter with Glass Doors	48	AU579	Handle
Polar U-Series 2 Door Counter with Glass Doors	49	AU577	Glass Door Right
Polar U-Series 2 Door Counter with Glass Doors	50	AL628	Front Support Right
Polar U-Series 2 Door Counter with Glass Doors	51	AL629	Back Support Right
Polar U-Series 2 Door Counter with Glass Doors	52	AU580	Down Hinge Left
Polar U-Series 2 Door Counter with Glass Doors	53	AU581	Down Hinge Right
Polar U-Series 2 Door Counter with Glass Doors	54	AJ954	Front Panel Up Hinge
Polar U-Series 2 Door Counter with Glass Doors	55	AK136	LED Transformer
Polar U-Series 2 Door Counter with Glass Doors	56	AS920	Lock Hook
Polar U-Series 2 Door Counter with Glass Doors	57	AU582	LED Lamp
Polar U-Series 2 Door Counter with Glass Doors	58	AU583	Middle Bridge
Polar U-Series 2 Door Counter with Glass Doors	59	☎	Door Switch Case
Polar U-Series 2 Door Counter with Glass Doors	60	AB888	Door Switch
Polar U-Series 2 Door Counter with Glass Doors	61	AA709	Front Panel Down Hinge
Polar U-Series 2 Door Counter with Glass Doors	62	AB971	Thermostat Protective Box
Polar U-Series 2 Door Counter with Glass Doors	63	AM426	Floor Protector Shelf
Polar U-Series 2 Door Counter with Glass Doors	64	AB955	Protector for Heating Element
Polar U-Series 2 Door Counter with Glass Doors	65	AK191	Defrost Heating Element
Polar U-Series 2 Door Counter with Glass Doors	N/A	☎	Electrics for Compressor ETH110L

☎ Technical & Spares helpline 0845 111 0538
spares@uropa-service.co.uk

Circuit Diagram

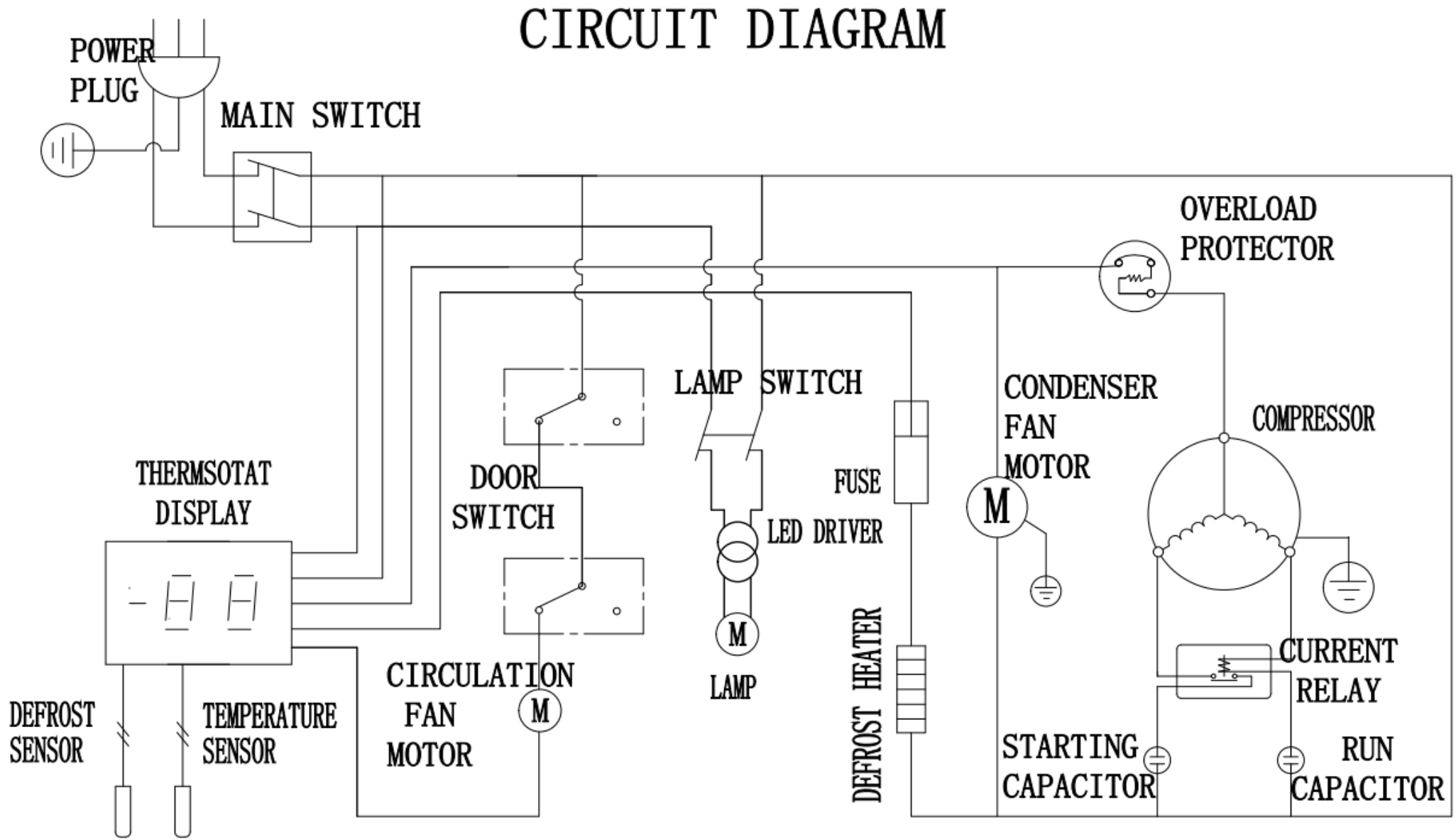

☎ Technical & Spares helpline 0845 111 0538
spares@uropa-service.co.uk